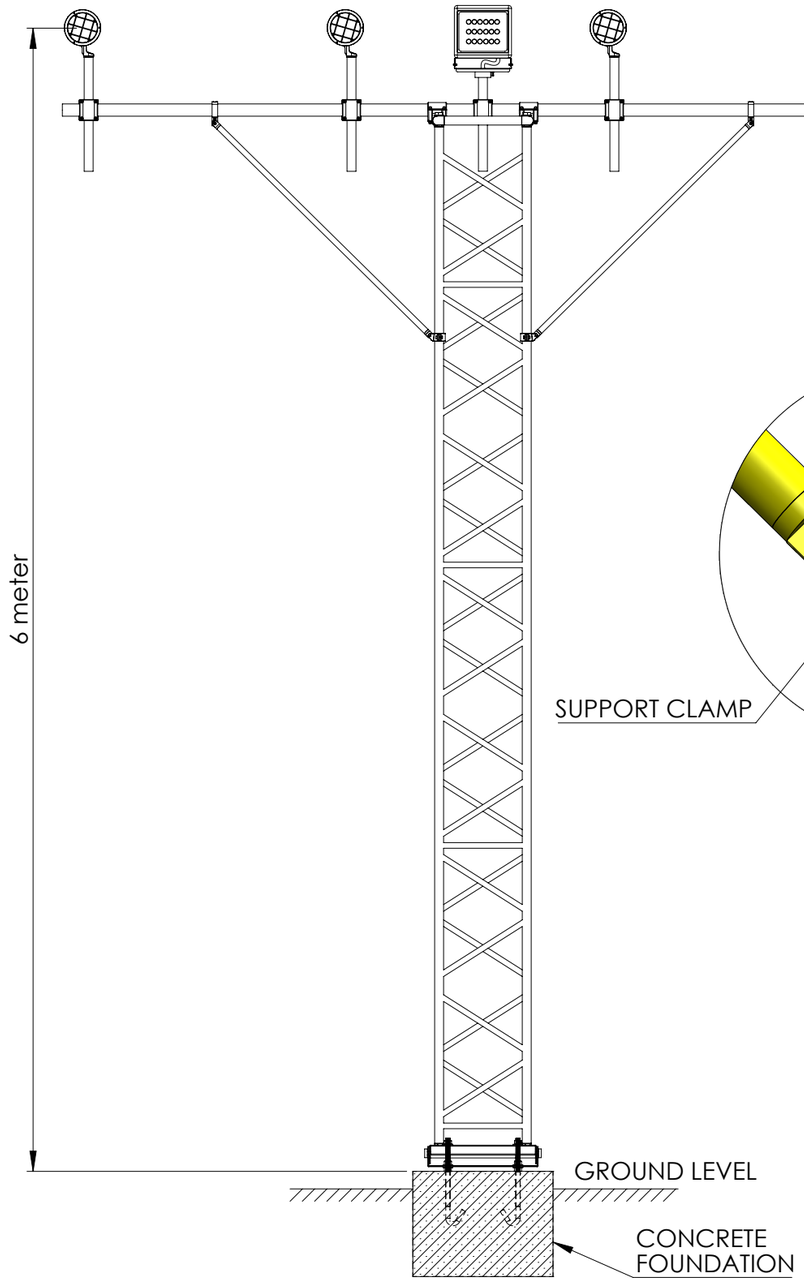

FRONT VIEW

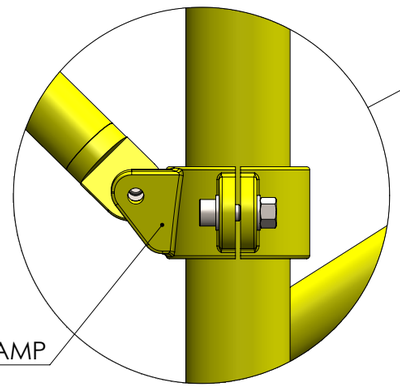

DETAIL A
SCALE 1 : 3

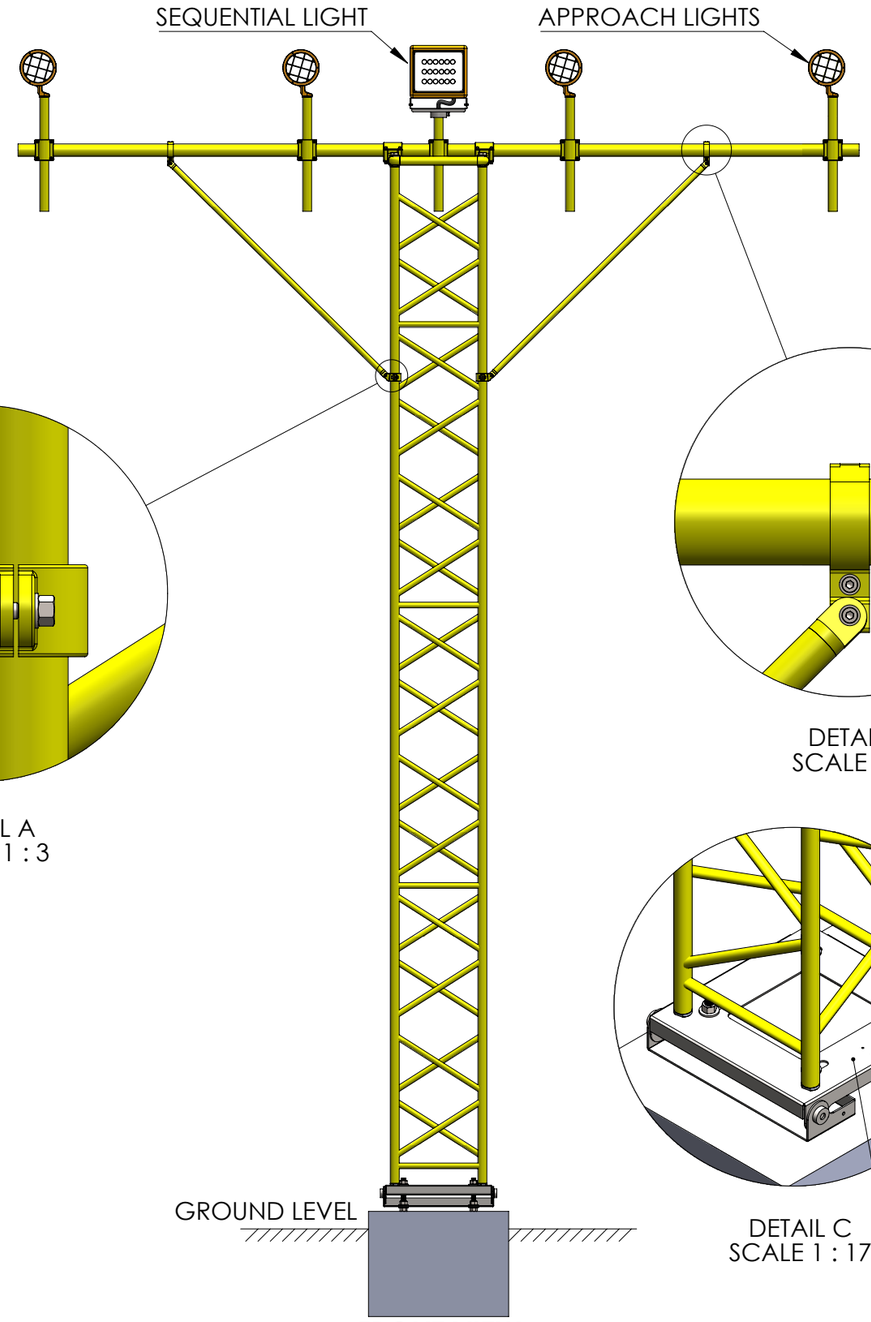

FRONT VIEW

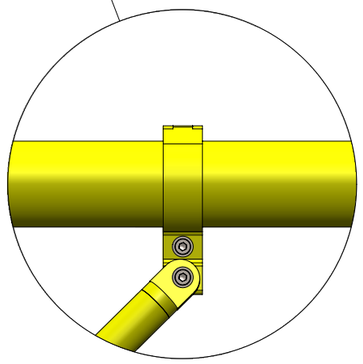

DETAIL B
SCALE 1 : 5

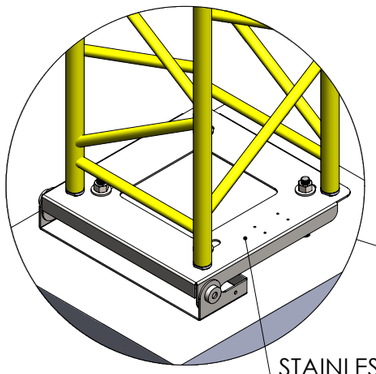

DETAIL C
SCALE 1 : 17

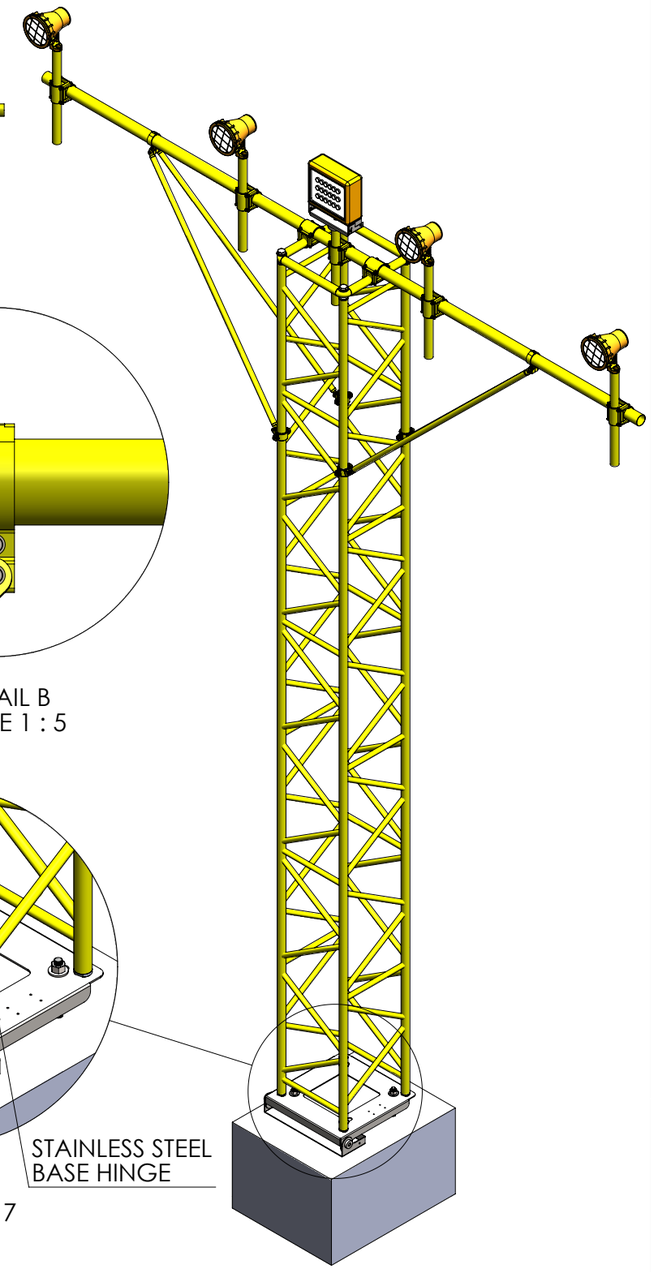

REV. Control	
REV.	DATE
1.1	11-12-20
1.2	10-08-21

PROPRIETARY AND CONTAINED
THE INFORMATION CONTAINED IN THIS DRAWING IS THE SOLE PROPERTY OF SGS FRANGIBLE, ANY REPRODUCTION IN PART OR AS A WHOLE WITHOUT THE WRITTEN PERMISSION OF SGS FRANGIBLE TOWERS Pvt. Ltd. IS PROHIBITED.

UNLESS OTHERWISE SPECIFIED:

DIMENSIONS ARE IN MILLIMETERS
TOLERANCES:
FRACTIONAL ±
ANGULAR: MACH ±
TWO PLACE DECIMAL ±
THREE PLACE DECIMAL ±

INTERPRET GEOMETRIC TOLERANCING

MATERIAL COMPOSITE

FINISH PU

DO NOT SCALE DRAWING

	NAME	DATE
DRAWN	DEEPAK KU.	10/08/2021
CHK'D	VIPIN GANDHI	10/08/2021
ENG APPR.		
MFG APPR.		
Q.A		

COMMENTS:

SGS Frangible Towers Pvt. Ltd.
Plot No. 36, Udyog Vihar
Phase - IV Gurugram
Haryana - 122015 INDIA

SIZE	DRAWING NAME & NO.	REV
A3	**SGS-STND-4050-06BH-6METER APPROACH LIGHT LATTICE MAST-V1.2**	**1.2**

SCALE : 1:35 | WEIGHT : K.G | SHEET 1OF 1